General Specification

DUPLEX RECEPTACLE, TAMPER RESISTANT 20A 125V

Item Code: TAN-772W

Features

- Tamper-resistant offers protection from electrical shocks.
- Shutter mechanism inside the receptacle blocks access to the contacts unless a two-prong plug is inserted, helping ensure hairpins, keys, etc., will be locked out.
- High impact-resistant thermoplastic construction offers long service life.
- Heavy gauge, rust resistant steel mounting strap.

Installation

- Terminal screws accept up to #12 AWG copper or copper-clad wire.
- Tri-drive ground, terminal, and mounting screws offer ease of installation.

Specification

Amperage: 20 Amp
Blade Type: Straight Blade
Color: White
Feature: Tamper-Resistant
Grounding: Self-Grounding
NEMA: 5-20R
Pole: 2
Wire: 3
Voltage: 125 Volts
Termination: Side
Type: Duplex Receptacle
Warranty: 2-Year Warranty

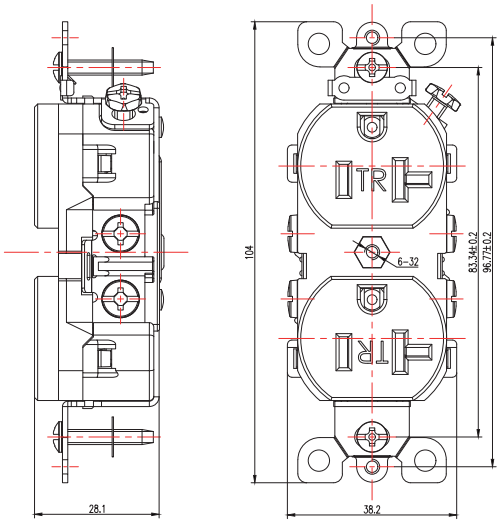

Testing & Code Compliance

ISO9001 Registered manufacturing facility